Grandstream Networks, Inc.

HT80x V2 - User Guide

HT80x V2 - User Guide

INTRODUCTION

The HT801 V2 and HT802 V2 are analog telephone adapters (ATAs)that allow users to connect analog phones and faxes with a VoIP (Voice over IP) system in order to create a high-quality and manageable IP telephony solutions for residential and office environments. Its ultra-compact size, voice quality, advanced VoIP functionality, security protection and auto provisioning options enable users to take advantage of VoIP on analog phones. It also allows service providers to offer high quality IP service to their market. The HT80x V2 series are ideal ATAsfor individual use as well as commercial IP voice deployments worldwide.

This manual will help you learn how to operate and manage your HT801 V2/HT802 V2 analog telephone adapters and leverage their many features including but not limited to simple and quick installation, 3-way conferencing, direct IP Calling, and automated provisioning.

Once HT801 V2/HT802 V2/HT812 V2/HT814 V2/HT818 V2 is upgraded to firmware 1.0.9.3 or later, downgrading to 1.0.7.5 or earlier is not supported due to CPU frequency adjustments.

PRODUCT OVERVIEW

Feature Highlights

The following table contains major features of HT801 V2 and HT802 V2:

   HT801 V2 HT802 V2	1 FXS port on HT801 V2 and 2 FXS ports on HT802 V2. Single 10/100Mbps port on both models. Support 3-way voice conferencing. Wide range of caller ID formats. Advanced telephony features, including Caller ID display or block, blind and attended call transfer, call forward, call-waiting, call hold, do not disturb, flash and more. T.38 Fax for creating Fax-over-IP. TLS and SRTP security encryption technology to protect calls and accounts. Automated provisioning options include TR-069 and XML config files. Failover SIP server automatically switches to secondary server if main server loses connection. Use with Grandstream's UCM series of IP PBXs for Zero Configuration provisioning.

HT801 V2/HT802 V2 Features at a Glance

HT801 V2/HT802 V2 Technical Specifications

The following tables summarize all the technical specifications including the protocols/standards supported, voice codecs, telephony features, languages, and upgrade/provisioning settings for the HT801 V2 and the HT802 V2.

	HT801 V2	HT802 V2
Interfaces		
Telephone Interfaces	One (1) RJ11 FXS port	Two (2) RJ11 FXS ports
Network Interface	One (1) 10/100Mbps auto-sensing Ethernet port (RJ45)	
LED Indicators	POWER, NET, PHONE	POWER, NET, PHONE1, PHONE2
Factory Reset Button	Yes	
Voice, Fax, Modem		
Telephony Features	Caller ID display or block, call waiting, flash, blind or attended transfer, forward, hold, do not disturb, 3-way conference	
Voice Codecs	G.711 with Annex I (PLC) and Annex II (VAD/CNG), G.722, G.723.1, G.729A/B, G.726-32, iLBC, OPUS, dynamic jitter buffer, advanced line echo cancellation	
Fax over IP	T.38 compliant Group 3 Fax Relay up to 14.4kpbs and auto-switch to G.711 for Fax Pass-through.	
Short/Long Haul Ring Load	5 REN: Up to 1km on 24 AWG	2 REN: Up to 1km on 24 AWG
Caller ID	Bellcore Type 1 & 2, ETSI, BT, NTT, and DTMF-based CID	
Dial Methods	DTMF, Pulse	
Disconnect Methods	Busy Tone, Polarity Reversal/Wink, Loop Current	
Signaling		
Network Protocols	TCP/IP/UDP, RTP/RTCP (RFC1889, 1890), HTTP/HTTPS, ARP/RARP, ICMP, DNS, DHCP, NTP, TFTP, SSH, Telnet, STUN (RFC3489, 5389), SIP (RFC3261), SIP over TCP/TLS, SRTP, SNMP, TR-069, IMS/3GPP, IPoE	
DTMF Methods	In-audio, RFC2833 and/or SIP INFO	
Provisioning and Control	HTTP, HTTPS, SSH, TFTP, TR-069, secure and automated provisioning using AES encryption, syslog	
QoS	Layer 2 (802.1Q VLAN, SIP/RTP 802.1p) and Layer 3 (ToS, DiffServ, MPLS)	
Security		
Media	SRTP	
Control	TLS/SIPS/HTTPS	
Management	Syslog support, SSH, Telnet remote management using web browser	
Physical		
Universal Power Supply	Input: 100-240VAC, 50-60Hz. Output: 5.0VDC/1.0A	
Environmental	Operational: 32° - 104°F or 0o - 40oC. Storage: 14° - 140°F or -10o - 60oC. Humidity: 10 - 90% Non-condensing	
Dimensions and Weight	* 100mm x 100mm x 29.5mm * 102g (without package)	* 100mm x 100mm x 29.5mm * 114g (without package).
Compliance	FCC: Part15B CE: EN55032, EN55024, EN61000-3-2, EN61000-3-3, EN60950-1, RCM: AS/NZS CISPR22, AS/NZS60950.1, S003K.21	FCC 15B, AS/NZS CISPR22, AS/NZS60950, EN55022, EN55024, EN60950, EN61000-3-2, EN61000-3-3, UL (Power supply) K.21

HT801 V2/HT802 V2 Technical Specifications

GETTING STARTED

This section provides basic installation instructions including the list of the packaging contents and information to connect the HT801 V2/HT802 V2.

Equipment Packaging

The HT801 V2 ATApackage contains:

1x HT801 V2

1x 5V Power Adapter

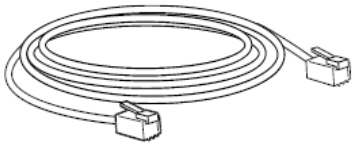

1x Ethernet Cable

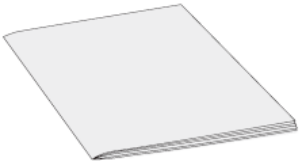

1x Quick Installation Guide

HT801 V2 Package Contents

The HT802 V2 ATApackage contains:

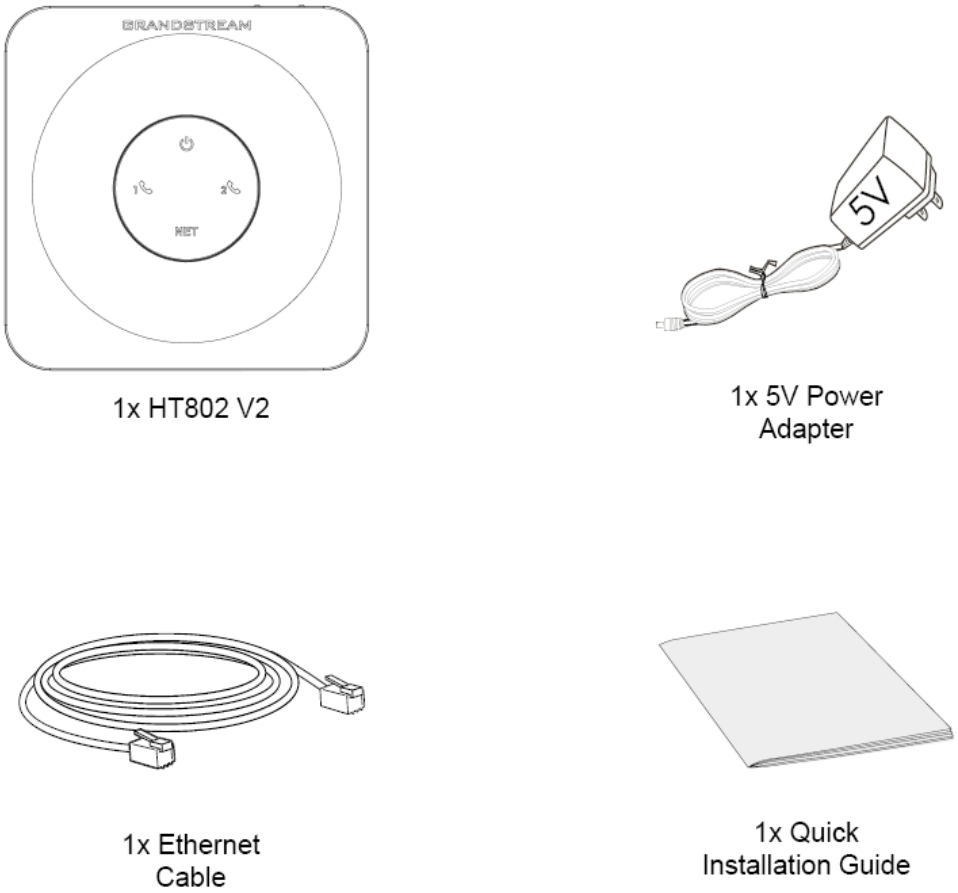

HT802 V2 Package Contents

Check the package before installation. If you find anything missing, contact your system administrator.

HT801 V2/HT802 V2 Ports Description

The following figure describes the different ports on the back panel of the HT801 V2.

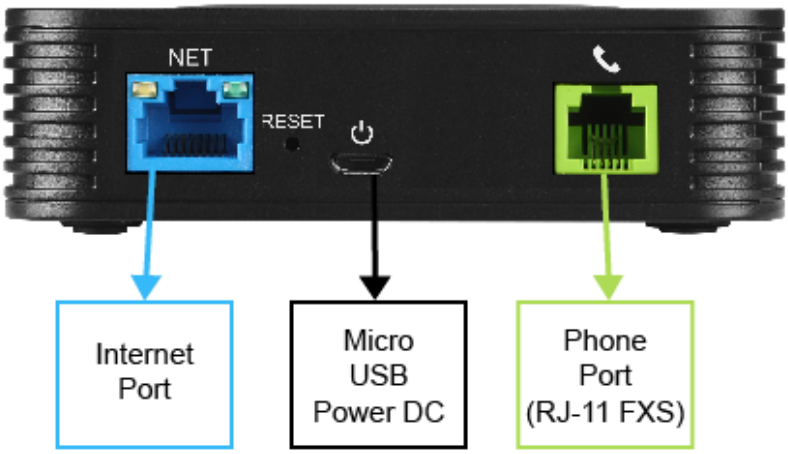

HT801 V2 Ports

The following figure describes the different ports on the back panel of the HT802 V2.

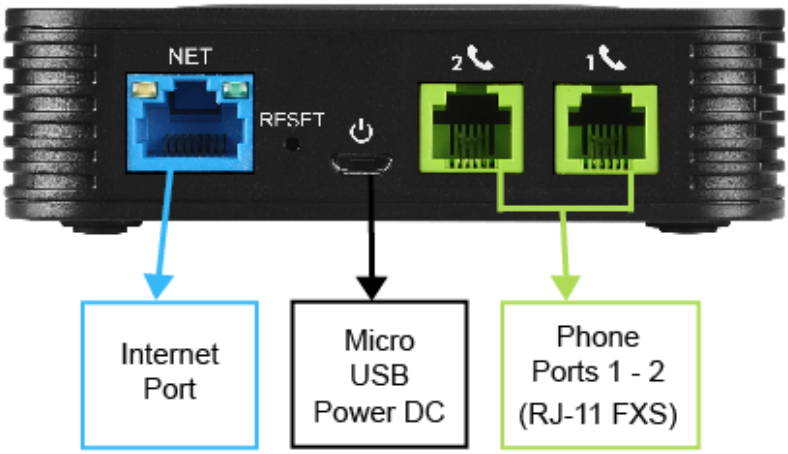

HT802 V2 Ports

Phone port for HT801 V2Phone 1 & 2 ports for HT802 V2	Connects the analog phones/fax machines to the phone adapter using an RJ-11 telephone cable.
NET port	Connects the phone adapter to your router or gateway using an Ethernet RJ45 network cable.
Micro USB DC Power	Connects the phone adapter to PSU (5V - 1A).

Reset	Factory reset button. Press for 7 seconds to reset factory default settings.

HT801 V2/HT802 V2 Ports Definition

Connecting HT801 V2/HT802 V2

In order to connect your HT801 V2 or HT802 V2, please follow the steps mentioned below:

1. Insert a standard RJ11 telephone cable into the phone port and connect the other end of the telephone cable to a standard touch-tone analog telephone.
2. Insert the Ethernet cable into the NET port of the HT801 V2/HT802 V2 and connect the other end of the Ethernet cable to an uplink port (a router or a modem, etc).
3. Insert the power adapter into the HT801 V2/HT802 V2 and connect it to a wall outlet.

Power, NET, and Phone LEDs will be solidly lit once the HT801 V2/HT802 V2 is ready for use.

HT801 V2/HT802 V2 LEDs Pattern

There are 3 LED indications on HT801 V2 and 4 on HT802 V2 as shown in the below figure:

HT801 V2/HT802 V2 LEDs Indications

LED Indication	Status
Power LED	The Power LED lights up when the HT801 V2/HT802 V2 is powered on, and it flashes when the unit is booting up
NET LED	The NET LED lights up when the HT801 V2/HT802 V2 is connected to a network through the Ethernet port, and it flashes when there is data being sent or received.
Phone LED for HT801 V2 Phone LED 1&2 for HT802 V2	The phone LEDs 1 & 2 indicate the status of the respective FXS port-phone on the back panelOFF - UnregisteredON (Solid Blue) - Registered and AvailableBlinking every second - Off-Hook / BusySlow blinking - FXS LEDs indicates voicemail

HT801 V2/HT802 V2 LEDs Pattern Description

CONFIGURATION GUIDE

There are two ways to configure HT801 V2/HT802 V2 :

- The IVR voice prompt menu.
- The Web GUI embedded on the HT801 V2/HT802 V2 using PC's web browser.

Obtain HT80x V2 IP Address via Connected Analog Phone

HT801 V2/HT802 V2 is by default configured to obtain the IP address from DHCP server where the unit is located. To know which IP address is assigned to your HT801 V2/HT802 V2, you should access to the IVR (Interactive Voice Response) menu of your adapter via the connected phone and check its IP address mode.

Please refer to the steps below to access the interactive voice response menu:

1. Use a telephone connected to phone for the HT801 V2 or phone 1 or phone 2 ports of your HT802 V2.
2. Press *** (press the star key three times) to access the IVR menu and wait until you hear "Enter the menu option".
3. Press 02 and the current IP address will be announced.

Understanding HT80x V2 Interactive Voice Prompt Response Menu

The HT801 V2/HT802 V2 has a built-in voice prompt menu for simple device configuration which lists actions, commands, menu choices, and descriptions. The IVR menu work with any phone connected to the HT801 V2/HT802 V2.

In order to access the IVR Menu, users need to dial "***".

Menu	Voice Prompt	Options
Main Menu	"Enter a Menu Option"	Press "*" for the next menu optionPress "#" to return to the main menuEnter 01-05, 07,10, 12-17, 20, 47 or 99 menu options
01	"DHCP Mode","Static IP Mode""PPPoE Mode"	Press "9" to toggle the selectionIf using "Static IP Mode", configure the IP address information using menus 02 to 05.If using "Dynamic IP Mode", all IP address information comes from the DHCP server automatically after reboot.If using "PPPoE Mode", configure PPPoE Username and Password from web GUI to get IP from your ISP.
02	"IP Address " + IP address	The current WAN IP address is announced If using "Static IP Mode", enter 12-digit new IP address.You need to reboot your HT801 V2/HT802 V2 for the new IP address to take Effect.
03	"Subnet " + IP address	Same as menu 02
04	"Gateway " + IP address	Same as menu 02
05	"DNS Server " + IP address	Same as menu 02
07	Preferred Vocoder	Press "9" to move to the next selection in the list:PCM U / PCM A iLBC G-726 G-723 G-729OPUSG722
10	"MAC Address"	Announces the MAC address of the unit. Note: The device has two MAC addresses. One for the WAN port and one for the LAN port. The device MAC address announced is the address of LAN port.
13	Firmware Server IP Address	Announces current Firmware Server IP address. Enter 12-digit new IP address.

14	Configuration Server IP Address	Announces current Config Server Path IP address. Enter 12-digit new IP address.
15	Upgrade Protocol	Upgrade protocol for firmware and configuration update. Press "9" to toggle between TFTP/HTTP/HTTP /FTP/FTPS
16	Firmware Version	Announces Firmware version information.
17	Firmware Upgrade	Firmware upgrade mode. Press "9" to toggle among the following three options:Always check Check when pre/suffix changesNever upgrade
20	Certificate Type	Annouces certificate information.
47	"Direct IP Calling"	Enter the target IP address to make a direct IP call, after dial tone.
86	Voice Mail	Access to your voice mails messages.
99	"RESET"	Press "9" to reboot the deviceEnter MAC address to restore factory default setting(See Restore Factory Default Setting section)
	"Invalid Entry"	Automatically returns to main menu
	"Device not registered"	This prompt will be played immediately after off hook If the device is not registered and the option "Outgoing Call without Registration" is in NO

Five success tips when using the voice prompt

- "*" shifts down to the next menu option and "#" returns to the main menu.
- "9" functions as the ENTER key in many cases to confirm or toggle an option.
- All entered digit sequences have known lengths - 2 digits for menu option and 12 digits for IP address. For IP address, add 0 before the digits if the digits are less than 3 (i.e. - **192.168.0.26** should be key in like **192168000026**. No decimal is needed).
- Key entry cannot be deleted but the phone may prompt error once it is detected.
- Dial *98 to announce the extension number of the port.

Configuration via Web Browser

The HT801 V2/HT802 V2 embedded Web server responds to HTTP GET/POST requests. Embedded HTML pages allow a user to configure the HT801/HT802 through a web browser such as Google Chrome, Mozilla Firefox, and Microsoft's IE.

Accessing the Web UI

Please follow the steps mentioned below to access the HT801 V2/HT802 V2 Web UI, :

1. Connect the computer to the same network as your HT801 V2/HT802 V2.
2. Make sure the HT801 V2/HT802 V2 is booted up.
3. You may check your HT801 V2/HT802 V2 IP address using the IVR on the connected phone. (In order to do this, please refer to this section of the guide)
4. Open the Web browser on your computer.
5. Enter the HT801 V2/HT802 V2's IP address in the address bar of the browser.
6. Enter "admin" under username as well as the administrator's password to access the Web Configuration Menu (the default password can be found on the sticker located at the back of the unit).

The computer must be connected to the same sub-network as the HT801 V2/HT802 V2. This can be easily

done by connecting the computer to the same hub or switch as the HT801 V2/HT802 V2.

Web UI Access Level Management

There are three access level for the login page:

User Level	User	Password	Web Pages Allowed
End User Level	user	123	View all pages but can only modify basic settings
Administrator Level	admin	random password located at the back of the unit	Browse all pages and modify all settings
Viewer Level	viewer	viewer	View all pages but no changes allowed.

- The password is case-sensitive and must contain 8-20 characters, at least one number, one uppercase, and one lowercase letter.
- When changing any settings, always submit them by pressing the Update or Apply button at the bottom of the page.
- Some changes require a reboot of the HT80x V2 unit such as FXS Port settings.
- By default, user and viewer access levels are disabled. In order to enable them please access **System Settings → Security Settings → Web Access**.
- After initial login using the default admin/user password, the user will be prompted to change the password immediately.

Saving the Configuration Changes

After modifying any configuration parameters, users can save the changes by clicking on the **Save** button. Once the configuration is saved, an **Apply** button will appear at the top of the page to allow users to apply the changes.

Users can also directly click on the **Save and Apply** button for the configuration changes to be saved and applied.

We recommend rebooting or powering cycling the ATAafter applying all the changes.

Changing Admin/User/Viewer Level Password

To change the password for any of the access levels, please refer to the following steps:

1. Access your HT801 V2/HT802 V2 Web UI by entering its IP address on your browser.
2. Enter the access level (admin, user or viewer) under username and your default password. (please refer to this section for the default password)
3. Press **Login** to access your configuration settings and navigate to **System Settings → Security Settings → User Info Management → Password.**
4. **Enter** the new admin/user/viewer password and **confirm** it (The new Password must contain 8-20 characters, at least one number, one uppercase, and a lowercase letter).
5. **Save** and **apply** the new admin/user/viewer password.

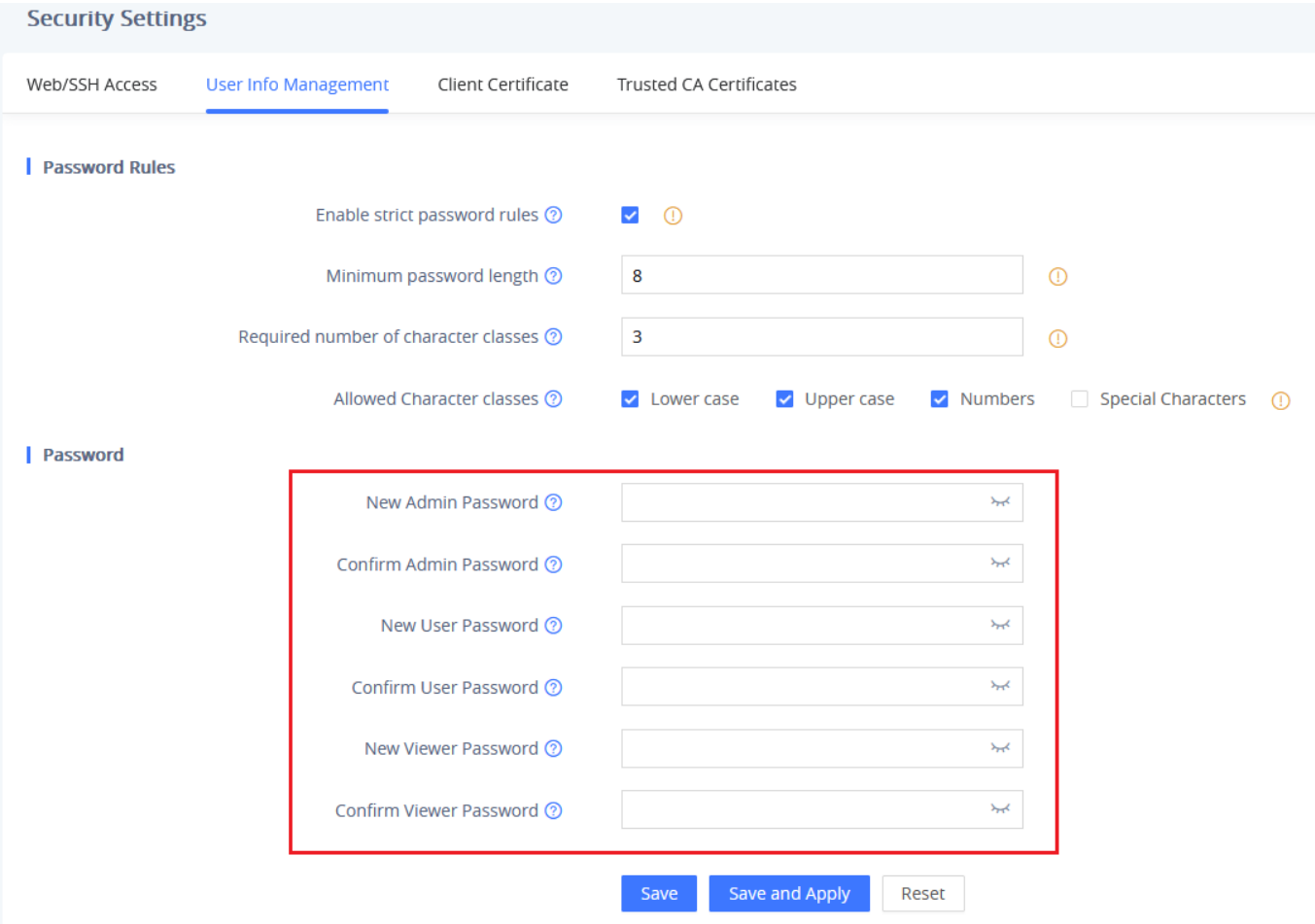

Changing the HTTP/HTTPS Web Port

1. Access your HT801 V2/HT802 V2 web UI by entering its IP address on your browser.
2. Enter "admin" under username, then type your admin password.
3. Press **Login** to access your settings and navigate to **System Settings → Security Settings → Web/SSH Access → Web Access**.
4. Choose the desired Web Access Mode and the new HTTP/HTTPS port. The valid range is [1-65535].
5. **Save** and **apply** the new port number.

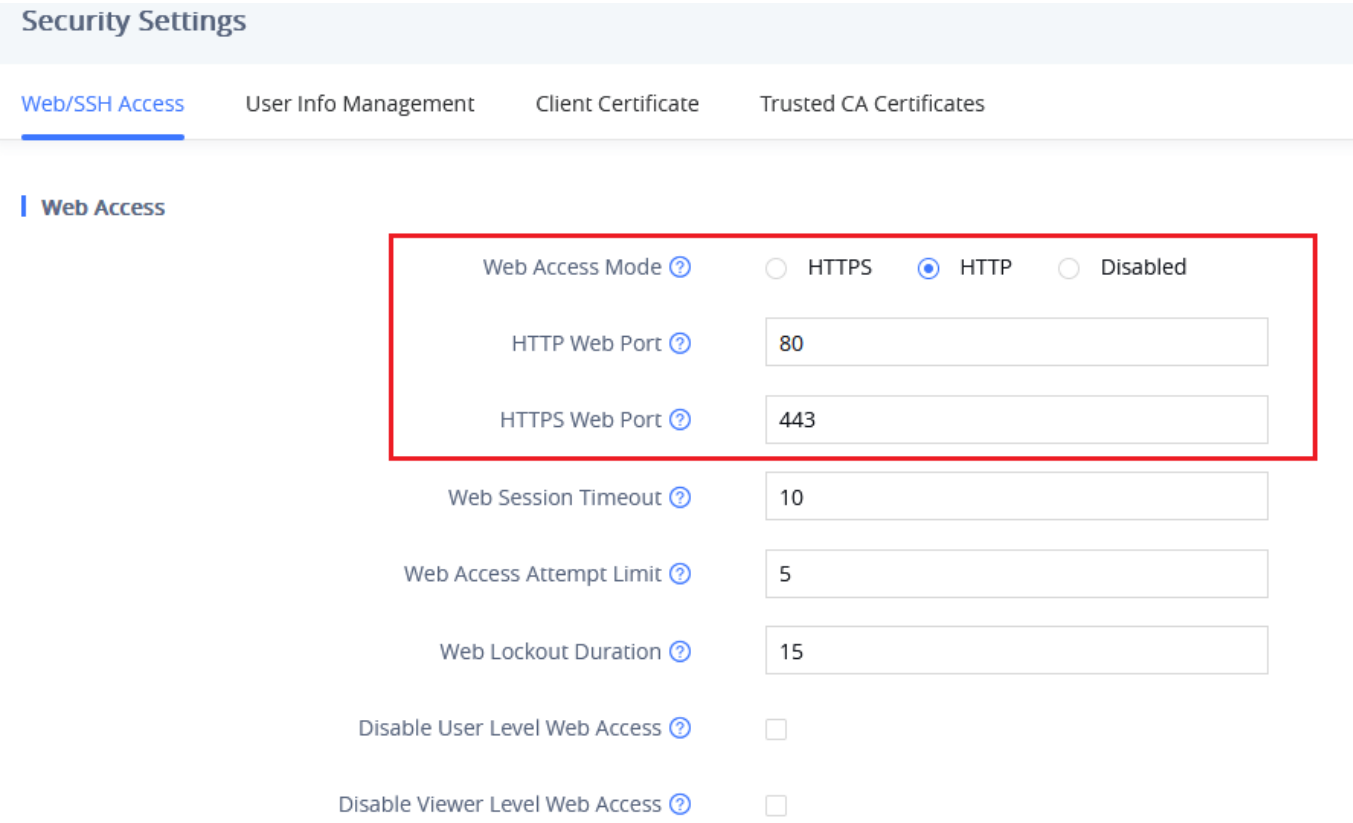

Configuring HT80x V2 through Voice Prompts

As mentioned previously, The HT80x V2 have a built-in voice prompt menu for simple device configuration. Please refer to "Understanding HT80x V2 Interactive Voice Prompt Response Menu" for more information about IVR and how to access its menu.

- **DHCP MODE**

Select voice menu option 01 to enable HT80x V2 to use DHCP.

- **STATIC IP MODE**

Select voice menu option 01 to enable HT80x V2 to use STATIC IP mode, then use options 02, 03, 04, and 05 to set up IP address, Subnet Mask, Gateway, and DNS server respectively.

- **PPPOE MODE**

Select voice menu options 01 to allow the HT80x V2 to enable the PPPoE mode. PPPoE Username and Password should be configured from web GUI.

- **FIRMWARE SERVER IP ADDRESS**

Select voice menu option 13 to configure the IP address of the firmware server.

- **CONFIGURATION SERVER IP ADDRESS**

Select voice menu option 14 to configure the IP address of the configuration server.

- **UPGRADE PROTOCOL**

Select menu option 15 to choose firmware and configuration upgrade protocol between TFTP, HTTP, HTTPS,

FTP, and FTPS.

- **FIRMWARE UPGRADE MODE**

Select voice menu option 17 to choose firmware upgrade mode among the following three options:
1) Always check, 2) check when pre/suffix changes, and 3) never upgrade.

- **WAN PORT WEB ACCESS**

Select voice menu option 12 to enable/disable web access from the WAN port. Press 9 in this menu to toggle between enable / disable. The default is disabled.

Register a SIP Account

The HT80x V2 support Profiles that can configure two SIP servers,

Please refer to the following steps in order to register your accounts via web user interface.

- Access your HT80x V2 web UI by entering its IP address in your favorite browser.
- Enter your admin password (default: found on the sticker on the back of the unit).
- Press **Login** to access your settings.
- Go to **FXS PORT** web pages and set the following:

1. **Account Active** to **Yes.**
2. **Primary SIP Server** field with your SIP server IP address or FQDN.
3. **Failover SIP Server** with your Failover SIP Server IP address or FQDN. Leave empty if not available.
4. **Outbound Proxy:** Set your Outbound Proxy IP Address or FQDN. Leave empty if not available.
5. **SIP User ID**: Enter the SIP User ID User account information, provided by VoIP service provider (ITSP). Usually in the form of digit similar to phone number or actually a phone number.
6. **Authenticate ID**: SIP service subscriber's Authenticate ID used for authentication. Can be identical to or different from SIP User ID.
7. **Authenticate Password**: SIP service subscriber's account password to register to SIP server of ITSP. For security reasons, the password will field will be shown as empty.
8. **Name**: Any name to identify this specific user.

- Press **Apply** at the bottom of the page to save your configuration.

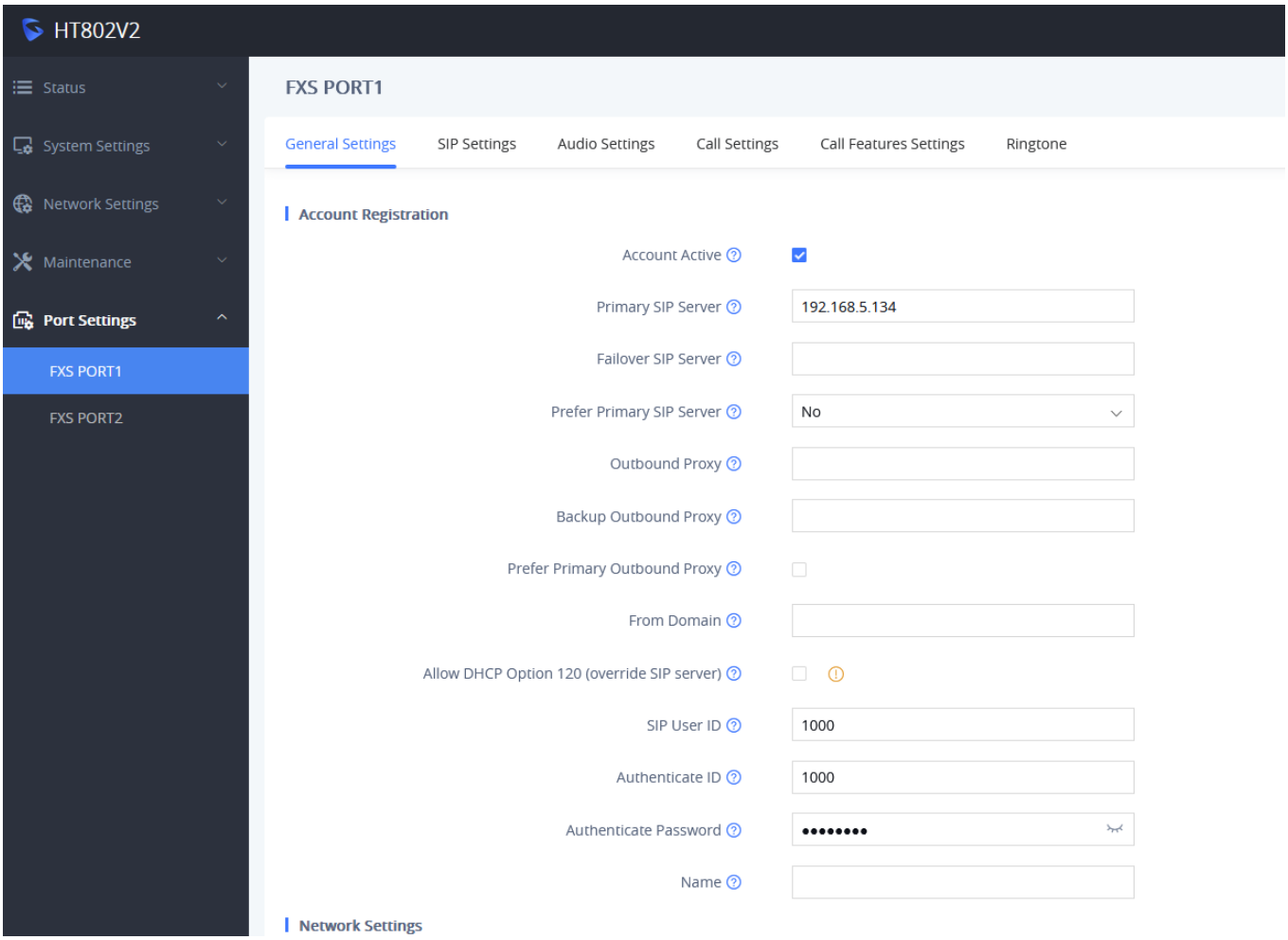

After applying your configuration, your account will register to your SIP Server, you can verify if it has been correctly registered with your SIP server from your HT80x V2 web interface under **Status → Port Status → Registration** (If it displays **Registered**, it means that your account is fully registered, otherwise it will display **Not Registered** so in this case you must double check the settings or contact your provider).

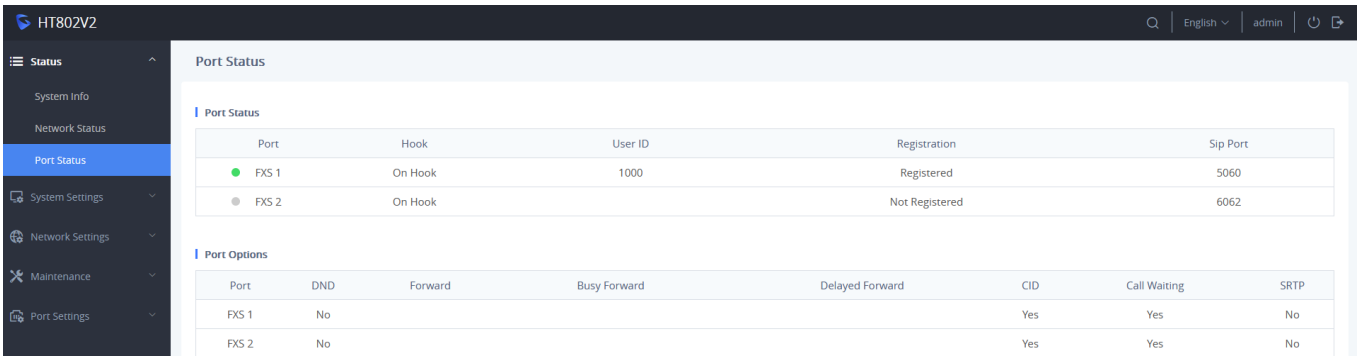

Rebooting HT80x V2 Remotely

Press the "Reboot" button at the bottom of the configuration menu to reboot the ATAremotely. The web browser will then display a message window to confirm that reboot is underway. Wait 30 seconds to log in again

CALL FEATURES

The HT80x V2 support all the traditional and advanced telephony features.

Key	Call Features
*02	Forcing a Codec (per call) *027110 (PCMU), *027111 (PCMA), *02723 (G723), *02729 (G729), *027201 (iLBC), *02722 (G722).
*03	Disable LEC (per call) Dial "*03" +" number".No dial tone is played in the middle.
*16	Enable SRTP
*17	Disable SRTP
*18	Enable SRTP per call. Meaning it's only valid for the current call.
*19	Disable SRTP per call. Meaning it's only valid for the current call.
*30	Block Caller ID (for all subsequent calls)
*31	Send Caller ID (for all subsequent calls)
*47	Direct IP Calling. Dial "*47" + "IP address". No dial tone is played in the middle.
*50	Disable Call Waiting (for all subsequent calls)
*51	Enable Call Waiting (for all subsequent calls)
*67	Block Caller ID (per call). Dial "*67" +" number". No dial tone is played in the middle.
*82	Send Caller ID (per call). Dial "*82" +" number". No dial tone is played in the middle.
*69	Call Return Service: Dial *69 and the phone will dial the last incoming phone number received.
*70	Disable Call Waiting (per call). Dial "*70" +" number". No dial tone is played in the middle.
*71	Enable Call Waiting (per call). Dial "*71" +" number". No dial tone is played in the middle
*72	Unconditional Call Forward: Dial "*72" and then the forwarding number followed by "#". Wait for dial tone and hang up. (dial tone indicates successful forward)
*73	Cancel Unconditional Call Forward. To cancel "Unconditional Call Forward", dial "*73", wait for dial tone, then hang up.
*74	Enable Paging Call: Dial "*74" and then the destination phone number you want to page.
*77	Enable set Offhook Auto-Dial.
*78	Enable Do Not Disturb (DND): When enabled all incoming calls are rejected.
*79	Disable Do Not Disturb (DND): When disabled, incoming calls are accepted.
*87	Blind Transfer
*90	Busy Call Forward: Dial "*90" and then the forwarding number followed by "#". Wait for dial tone then hang up.
*91	Cancel Busy Call Forward. To cancel "Busy Call Forward", dial "*91", wait for dial tone, then hang up.
*92	Delayed Call Forward. Dial "*92" and then the forwarding number followed by "#". Wait for dial tone then hang up.
*93	Cancel Delayed Call Forward. To cancel Delayed Call Forward, dial "*93", wait for dial tone, then hang up

*98	Enable to play the registration ID.
Flash/Hook	Toggles between active call and incoming call (call waiting tone). If not in conversation, flash/hook will switch to a new channel for a new call.
#	Pressing pound sign will serve as Re-Dial key.

HT80x V2 Call Features

CALL OPERATIONS

Placing a Phone Call

To make the outgoing calls using your HT80x V2

1. Pick up the handset of the connected phone.
2. Dial the number directly and wait for 4 seconds (Default "**No Key Entry Timeout**"); or
3. Dial the number directly and press # ("**Use # as dial key**" must be configured in web configuration).

Examples:

1. Dial an extension directly on the same proxy, (e.g. 1008), and then press the # or wait for 4 seconds.

2. Dial an outside number (e.g. (626) 666-7890), first enter the prefix number (usually 1+ or international code) followed by the phone number. Press # or wait for 4 seconds. Check with your VoIP service provider for further details on prefix numbers.

Note:

When placing the analog phone that is connected to the FXS port off hook, the dial tone will be played even if the sip account is not registered. If users prefer the busy tone to be played instead, the following configuration need to be made:

- **"Play Busy Tone When Account is unregistered"** need to be set to **YES** under **advanced settings**.

- **"Outgoing call without registration"** need to be set to **NO** under **Profile x** settings.

Direct IP Calls

Direct IP calling allows two parties, that is, an FXS Port with an analog phone and another VoIP Device, to talk to each other in an ad hoc fashion without a SIP proxy.

Elements necessary to completing a Direct IP Call:

- Both HT80x V2 and other VoIP Device, have public IP addresses, or
- Both HT80x V2 and other VoIP Device are on the same LAN using private IP addresses, or
- Both HT80x V2 and other VoIP Device can be connected through a router using public or private IP addresses (with necessary port forwarding or DMZ).

The HT80x V2 support two ways to make Direct IP Calling:

Using IVR

1. Pick up the analog phone then access the voice menu prompt by dialing "***"

2. Dial "47" to access the direct IP call menu

3. Enter the IP address after the dial tone and voice prompt "Direct IP Calling"

Using Star Code

1. Pick up the analog phone then dial "*47"

2. Enter the target IP address.

Note: No dial tone will be played between steps 1 and 2 and destination ports can be specified using "*" (encoding for ":") followed by the port number.

Examples of Direct IP Calls:

a) If the target IP address is 192.168.0.160, the dialing convention **is *47 or Voice Prompt with option 47, then 192*168*0*160**, followed by pressing the "#" key if it is configured as a send key or wait 4 seconds. In this case, the default destination port 5060 is used if no port is specified

b) If the target IP address/port is 192.168.1.20:5062, then the dialing convention would be: ***47 or Voice Prompt with option 47, then 192*168*0*160*5062** followed by pressing the "#" key if it is configured as a send key or wait for 4 seconds.

Note: When completing direct IP call, the "**Use Random SIP/RTP Port**" should set to "**NO**".

Call Hold

You can place a call on hold by pressing the "flash" button on the analog phone (if the phone has that button).

Press the "flash" button again to release the previously held Caller and resume conversation. If no "flash" button is available, use "hook flash" (toggle on-off hook quickly). You may drop a call using hook flash.

Call Waiting

The call waiting tone (3 short beeps) indicates an incoming call, if the call waiting feature is enabled.

To toggle between incoming call and current call, you need to press the "flash" button the first call is placed on hold.

Press the "flash" button to toggle between the active calls.

Call Transfer

Blind Transfer

Assume that the call is established between phone A and B are in conversation. The phone A wants to blind transfer phone B to phone C:

1. On the phone A presses FLASH to hear the dial tone.
2. The phone A dials *87 then dials caller C's number, and then # (or wait for 4 seconds)
3. The phone A will hear the dial tone. Then, A can hang up.

"Enable Call Feature" must be set to "Yes" in web configuration page.

Attended Transfer

Assume that the call is established between phone A and B are in conversation. The phone A wants to attend transfer phone B to phone C:

1. On the phone A presses FLASH to hear the dial tone.
2. Phone A dials the phone C's number followed by # (or wait for 4 seconds).
3. If phone C answers the call, phones A and C are in conversation. Then A can hang up to complete transfer.
4. If phone C does not answer the call, phone A can press "flash" to resume call with phone B.

When attended transfer fails and A hangs up, the HT80x V2 will ring back user A to remind A that B is still on the call. A can pick up the phone to resume conversation with B

3-Way conferencing

The HT80x V2 supports Bellcore style 3-way Conference. To perform the 3-way conference, we assume that the call is established between phone A and B are in conversation. Phone A (HT80x V2) wants to bring third phone C into conference:

1. Phone A presses FLASH (on the analog phone, or Hook Flash for old model phones) to get a dial tone.
2. Phone A dials C's number then # (or wait for 4 seconds).
3. If phone C answers the call, then A presses FLASH to bring B, C in the conference.
4. If phone C does not answer the call, phone A can press FLASH back to talk to phone B.
5. If phone A presses FLASH during conference, the phone C will be dropped out.
6. If phone A hangs up, the conference will be terminated for all three parties when configuration "Transfer on Conference Hang up" is set to "No". If the configuration is set to "Yes", A will transfer B to C so that B and C can continue the conversation.

Call Return

To call back to the latest incoming number.

1. Pick up the handset of the connected phone (Off-hook).

2. After hearing the dial tone, input "*69".

3. Your phone will automatically call back to the latest incoming number.

All star codes (*XX) related features mentioned above are supported by ATAdefault settings. If your service provider provides different feature codes, please contact them for instructions.

Inter-Port Calling

In some cases, a user may want to make phone calls between the phones connected to multiple ports of the same HT80x V2 when it is used as a standalone unit, without the use of a SIP server. In such cases, users still will be able to make inter-port calls by using the IVR feature.

On the HT80x V2 inter-port calling is achieved by dialing ***7X (X is the port number). For example, the user connected to port 1 can be reached by dialing *** and 71.

Voice Mail

VM Notification

The HT80x V2 indicates new voice mail messages using Phone LEDs and Stutter Tone.

The Phone LEDs on HT80x V2 will start blinking slowly when a new voice mail message is available on corresponding account.

A stutter tone will be played at first few seconds followed by dial tone when picking up the handset.

Note: New VM messages can be also indicated by LED blink, screen display, etc... if they are supported on connected analog phones.

Accessing VM

To retrieve the new voice mail messages received, please refer to following steps:

1. Pick up the handset of the connected phone (stutter tone will be played).
2. Press *** (press the star key three times) to access the IVR menu and wait until you hear "Enter the menu option ".
3. Press 86 and enter your configured password (if exist) to access your voice mail menu.

Flash Digit Control

If the option **Flash Digit Control** is enabled on the web UI, call operations will require different steps as follows:

Flash Digit Call Hold

Assume that the call is established between phone A and B.

1. Phone A received a call from C, then it held B to answer C.
2. Press the **"Flash + 1"** to hang up the current call (A - C) and resume the call on hold (B).
3. Or press **"Flash + 2"** to hold the current call (A - C) and resume the call on hold (B).

Flash Digit Attended transfer

Assume that the call is established between phone A and B. Phone A wants to attend transfer phone B to phone C:

1. On the phone A presses FLASH to hear the dial tone.
2. Phone A dials the phone C's number, followed by # (or wait for 4 seconds).
3. If phone C answers the call, phones A and C are in conversation. Then A can press **"Flash + 4"** to complete the transfer. Alternatively, if **Flash Digit Control** is set to **"Yes with Attended Transfer Upon Onhook"**, A can simply place the handset on-hook to complete the transfer.

Flash Digit 3-Way Conferencing

Assume that the call is established, and phones A and B are in conversation. Phone A(HT81x V2) wants to bring the third phone C into the conference:

1. Phone A presses Flash (on the analog phone, or Hook Flash for old model phones) to get a dial tone.
2. Phone A dials C's number then # (or wait for 4 seconds).
3. When phone C answers the call, then A can press **"Flash +3"** to bring B and C into the conference.

Flash Digit Control

If the option "Flash Digit Control" is enabled on web UI, call operations will require different steps as follows:

NAT Settings

If you plan to keep the HT80x V2 within a private network behind a firewall, we recommend using STUN Server. The following three settings are useful in the STUN Server scenario:

1. STUN Server (under advanced settings webpage) Enter a STUN server IP (or FQDN) that you may have, or look up a free public STUN Server on the internet and enter it on this field. If using Public IP, keep this field blank.

2. Use Random SIP/RTP Ports (under advanced settings webpage) This setting depends on your network settings. Generally, if you have multiple IP devices under the same network, it should be set to Yes. If using a public IP address, set this parameter to No.

3. NAT traversal (under the FXS web page), set this to Yes when gateway is behind firewall on a private network.

DTMF Methods

The HT80x V2 support the following DTMF mode:

* DTMF in-audio

* DTMF via RTP (RFC2833)

* DTMF via SIP INFO

Set priority of DTMF methods according to your preference. This setting should be based on your server DTMF setting.

Preferred Vocoder (Codec)

The HT80x V2 support following voice codecs. On Profile pages, choose the order of your favorite codecs:

- PCMU/A (or G711u/a)
- G729 A/B
- G723.1
- G726
- iLBC
- OPUS
- G722

UPGRADING AND PROVISIONING

The HT80x V2 can be upgraded via TFTP/HTTP/HTTPS/FTP/FTPS by configuring the URL/IP Address for

the TFTP/HTTP/HTTPS/FTP/FTPS server and selecting a download method. Configure a valid URL for TFTP, HTTP/HTTPS or FTP/FTPS; the server name can be FQDN or IP address.

Examples of valid URLs:

- firmware.grandstream.com
- fw.ipvideotalk.com/gs

Once HT801 V2/HT802 V2/HT812 V2/HT814 V2/HT818 V2 is upgraded to firmware 1.0.9.3 or later, downgrading to 1.0.7.5 or earlier is not supported due to CPU frequency adjustments.

The HT80x V2 series supports adding variables to provisioning-related settings. The variables are replaced by their corresponding values. The following variables are supported:

- **PN:** The device model, such as HT02V2.
- **MAC:** The device's MAC address, such as 000b829a8ffe.
- **VendorName:** The vendor name.
- **ModelName:** The device model.
- **HwVersion:** The hardware version.
- **FirmwareVersion:** The firmware version.
- **Suffix:** The configured server path suffix.

The variables support the following formats: {**PN}**, **$PN**, and **${PN}**.

Variable support is available in the following settings:

- **Firmware Server Path:** Under **Maintenance -> Upgrade -> Firmware -> Upgrade via Network**, or through P-value **P192**. To configure the P-value, refer to **Upgrading via Local Directory**.
- **Config Server Path:** Under **Maintenance -> Upgrade -> Config File -> Configure via Network**, or through P-value **P237**.
- **HTTP/HTTPS User-Agent:** Under **Network Settings -> Advanced Settings**, or through P-value **P1541**.
- **SIP User-Agent:** Under **Port Settings -> FXS PORT X**, or through P-values **P29071** and **P29171**.

To configure the P-value, download the configuration file, edit the P-value, and upload the updated configuration file under **Maintenance -> Upgrade -> Config File -> Manual Configuration**.

Example:

Configuring the Config Server Path as tftp://192.168.5.2/$PN_$MAC.cfg results in the device requesting the configuration file tftp://192.168.5.2/HT02V2_000b829a8ffe.cfg.

Firmware Upgrade procedure

Please follow below steps to upgrade the firmware version of your HT80x V2:

1. Access your HT80x V2 UI by entering its IP address in your favorite browser.
2. Enter your admin password (default: found on the sticker on the back of the unit).

3. Press **Login** to access your settings.
4. Go to **Maintenance → Upgrade → Firmware** page and enter the IP address or the FQDN for the upgrade server in "**Firmware Server Path**" field and choose to upgrade via **TFTP, HTTP/HTTPS or FTP/FTPS**.
5. Update the change by clicking the "Save and Apply" button at the bottom of the page. Then "**Reboot**" or power cycle the HT80x V2 to update the new firmware.

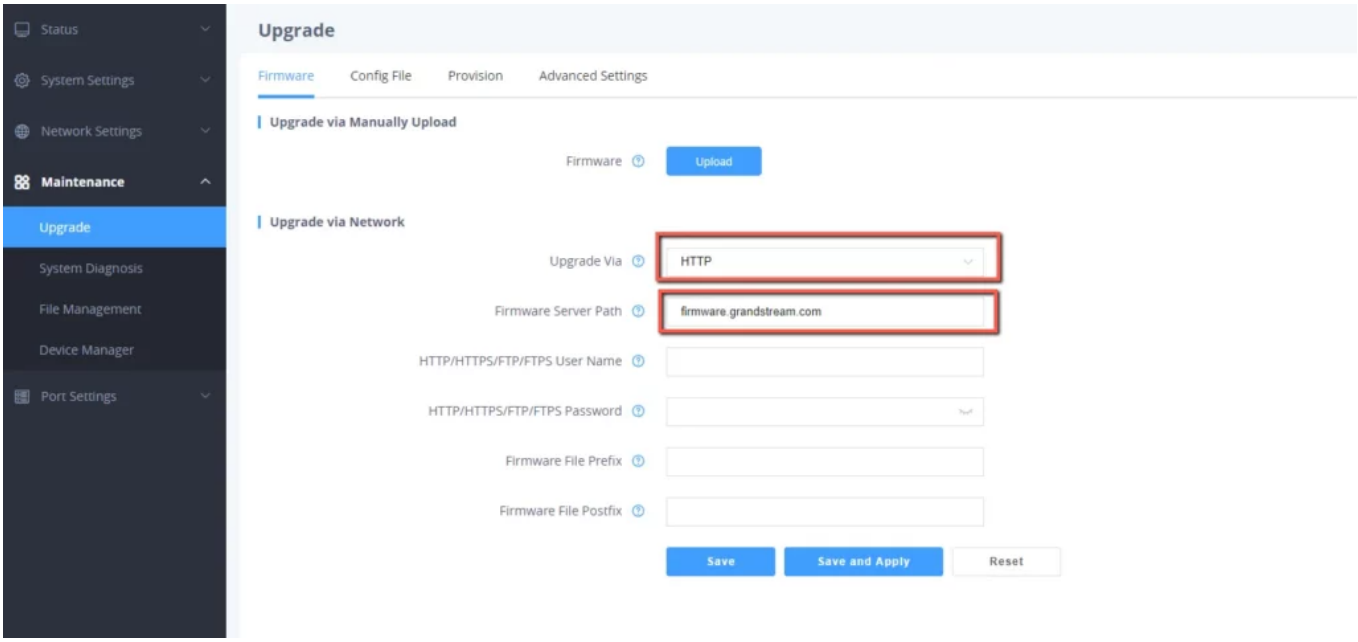

Firmware Upgrade Page

Upgrading via Local Directory

1. Download the firmware file from the Grandstream web site
2. Unzip it and copy the file in to a folder in your PC
3. From the HT80x V2 web interface **Maintenance → Upgrade → Firmware** you can browse your hard drive and select the folder you previously saved the file.
4. Click "Upload" and wait few minutes until the new program is loaded.

Always check the status page to see that the program version has changed.

the filename in URL for the firmware upgrade has been disabled.

Upgrading via Local TFTP/HTTP/HTTPS/FTP/FTPS Servers

For users that would like to use remote upgrading without a local TFTP/HTTP/HTTPS/FTP/FTPS server, Grandstream offers a NAT-friendlyHTTP server. This enables users to download the latest software upgrades for their devices via this server. Please refer to the webpage:

https://www.grandstream.com/support/firmware

Alternatively, users can download, for example, a free TFTP or HTTP server and conduct a local firmware upgrade. A free window version TFTP server is available for download from:

https://www.solarwinds.com/products/freetools/free_tftp_server.aspx

https://pjo2.github.io/tftpd64/

Instructions for local firmware upgrade via TFTP:

1. Unzip the firmware files and put all of them in the root directory of the TFTP server.
2. Connect the PC running the TFTP server and the phone to the same LAN segment.
3. Launch the TFTP server and go to the File menu→Configure→Security to change the TFTP server's default setting from "**Receive Only**" to "**Transmit Only**" for the firmware upgrade.
4. Start the TFTP server and configure the TFTP server in the phone's web configuration interface.
5. Configure the Firmware Server Path to the IP address of the PC.
6. Save and Apply the changes and reboot the HT80x V2.

End users can also choose to download a free HTTP server from https://httpd.apache.org/ or use a Microsoft IIS web server.

Firmware and Configuration File Prefix and Postfix

Firmware Prefix and Postfix allow the device to download the firmware name with the matching Prefix and Postfix. This makes it possible to store all the firmware with different version in one single directory. Similarly, Config File Prefix and Postfix allow the device to download the configuration file with the matching Prefix and Postfix. Thus, multiple configuration files for the same device can be stored in one directory.

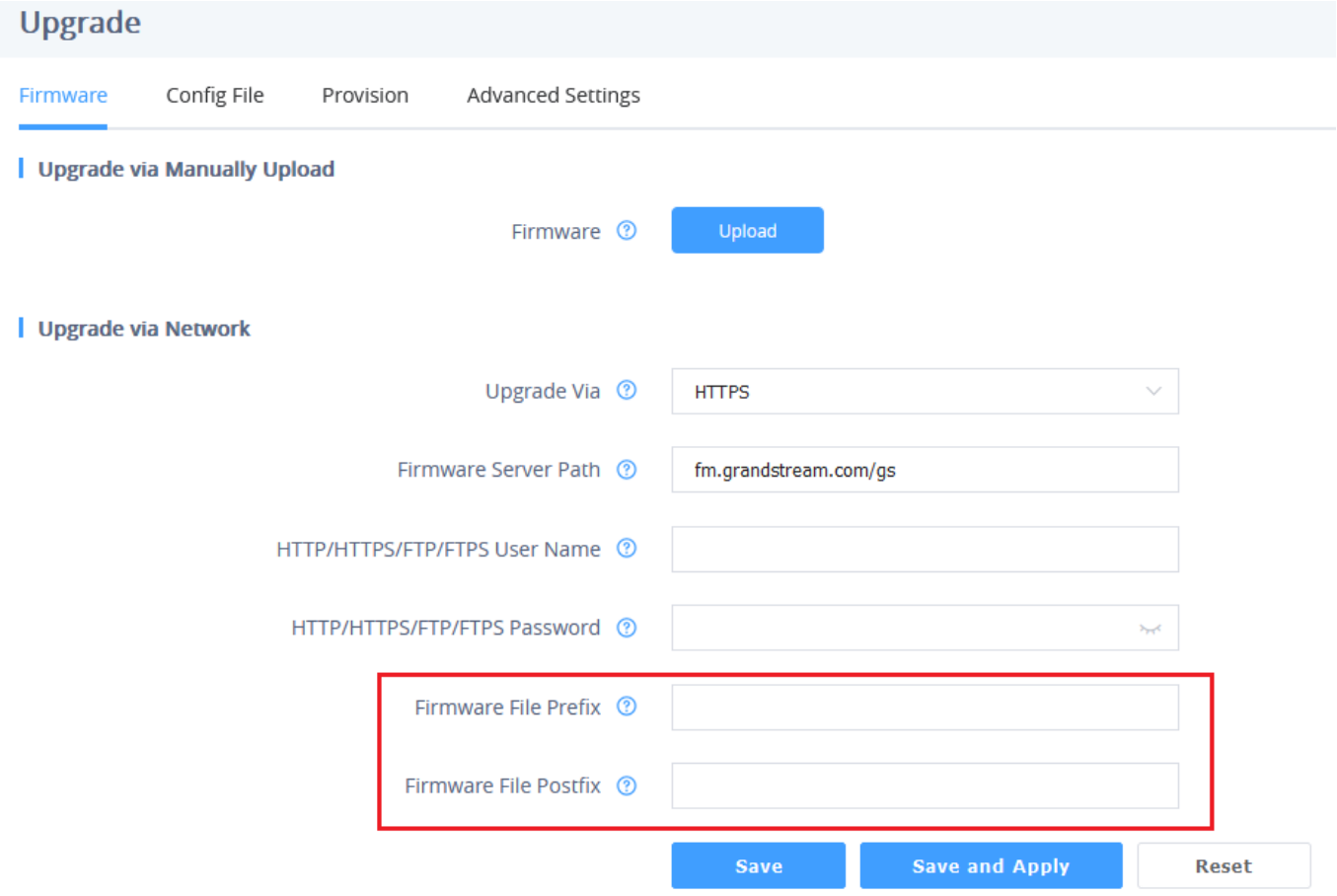

Firmware File Prefix and Postfix

Managing Automatic Upgrade

When "Automatic Upgrade" is set "**Check**" the auto check will be done in the minute specified in this field. If set to "**Every day in hour (0-23)"**, Service Provider can use P193 (Auto Check Interval) to have the devices do a daily check at the hour set in this field with either Firmware Server or Config Server. If set to "**Weekly on day (0-6)"** the auto check will be done on the day specified in this field. This allows the device periodically to check if there are any new changes need to be taken on a scheduled time. By defining different intervals in P193 for different devices, Server Provider can spread the Firmware or Configuration File download in minutes to reduce the Firmware or Provisioning Server load at any given time

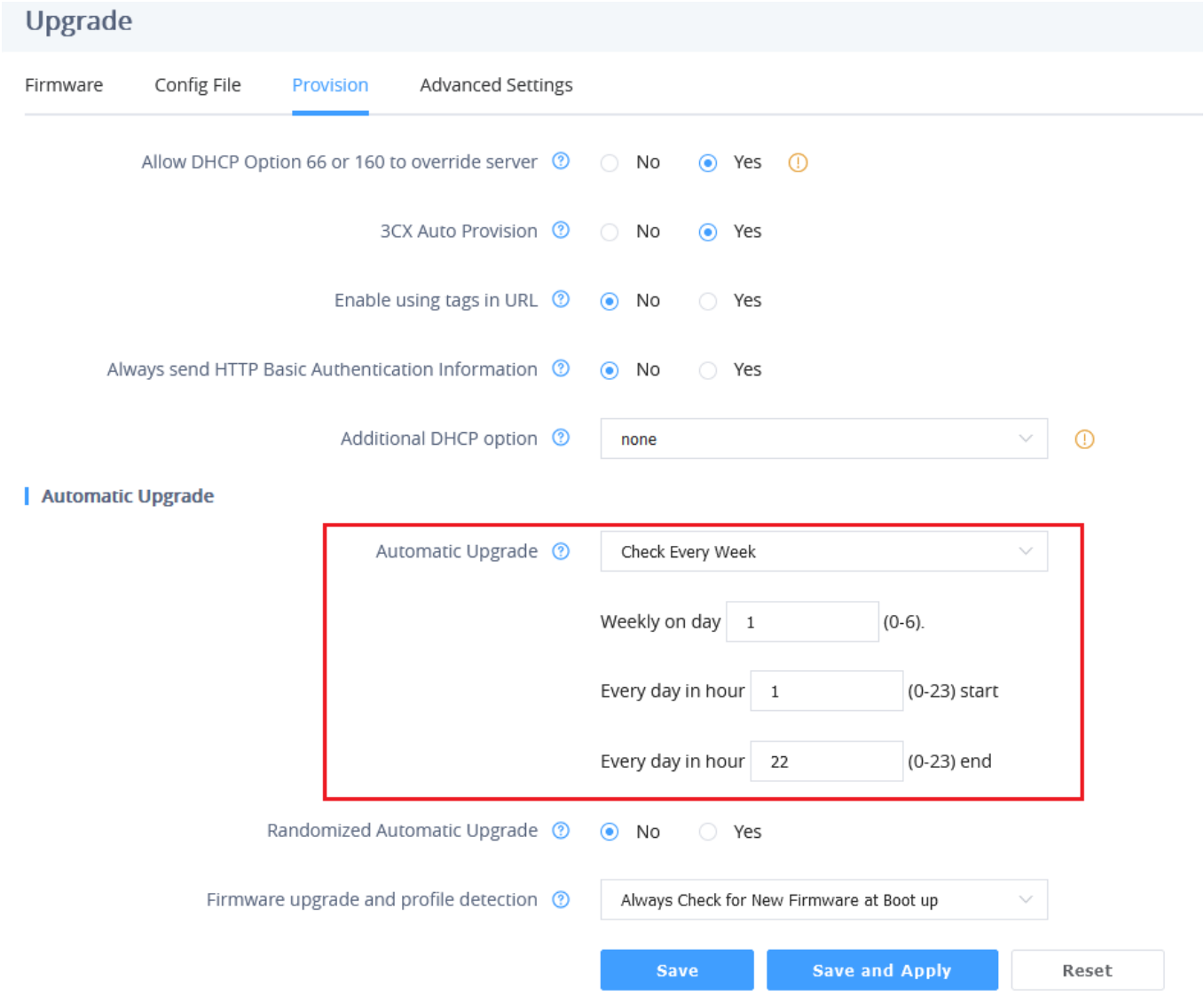

Automatic Upgrade

Managing Device using GDMS Cloud

The GDMS Device Management System is a cloud solution from Grandstream that facilitates the provisioning and management of Grandstream devices, including the HT8xx V2 ATAs.

The platform enables users to centralize the control and management of multiple HT8xx devices, deployed across various locations, on a single interface. It provides functionalities to upgrade, add, configure, and monitor HT8xx devices from one centralized dashboard.

For more details on the supported HT8xx models and their deployment to the GDMS platform, refer to the following guide: GDMS Unified Communications - User Guide.

If you don't have a GDMS account yet, visit the following website to create one: GDMS.

Configuration File Download

Grandstream SIP Devices can be configured via the Web Interface as well as via a Configuration File (binary or XML) through TFTP, HTTP/HTTPS or FTP/FTPS. The **Config Server Path** is the TFTP, HTTP/HTTPS or FTP/FTPS server path for the configuration file. It needs to be set to a valid URL, either in FQDN or IP address format. The **Config Server Path** can be the same or different from the **Firmware Server Path**.

A configuration parameter is associated with each particular field in the web configuration page. A parameter consists of a Capital letter P and 1 to 5 (Could be extended in the future) digit numeric numbers. i.e., P30 is associated with the "NTP Server" in the **Web GUI→System Settings→Time and Language→Time Zone→NTP Server**. For a detailed parameter list, please refer to the corresponding firmware release configuration template.

When the HT80x V2 boots up or reboots, it will send a request to download the xml file named "cfgxxxxxxxxxxxx.xml" followed by the binary file named "cfgxxxxxxxxxxxx", where "xxxxxxxxxxxx" is the MAC address of the phone, i.e., "cfg000b820102ab" and "cfg000b820102ab.xml". If the download of "cfgxxxxxxxxxxxx.xml" file is not successful, the provision program will download a generic cfg<Model>.xml file and then download cfg.xml. The configuration file name should be in lower case letters.

HT818 supports DHCP option 67 allowing to provide custom name for the provisioning file. If DHCP option 67 is used, the following file download sequence will be applied:

Step 1: <option 67 bootfile>

Step 2: cfg<MAC>.xml ->cfg<MAC>->cfg<Model>.xml ->cfg.xml

Notes:

1. The Only acceptable Config file formats to be used when provisioning are XML or binary.

2. Make sure the MAC header on the Config file is the provisioned device's MAC address or you can remove the header completely.

3. When the <option 67 bootfile> is downloaded from the server, the cfg<MAC>.xml is not requested.

For more details on XML provisioning, please refer to:

https://documentation.grandstream.com/knowledge-base/sip-device-provisioning-guide/

The filename in URL for config provision has been disabled.

Configuration and Firmware Upgrade through Resync SIP NOTIFY

HT80x V2 supports triggering firmware and configuration upgrade using Resync SIP NOTIFY. The event:resync NOTIFY allows the device to re-synchronize its configuration by checking the provisioning server to download any updates.

Below is an example of a resync SIP NOTIFY:

```
NOTIFY sip:device@domain.com SIP/2.0
Via: SIP/2.0/UDP 10.0.0.5:5060;branch=z9hG4bK-d4f2-9a75
Max-Forwards: 70
From: "Provisioning Server" <sip:provisioning@domain.com>;tag=prov-server
To: <sip:device@domain.com>;tag=device-987654
```

```
Call-ID: 987654xyz321
CSeq: 12345 NOTIFY
Event: resync
Content-Type: application/simple-message-summary
Content-Length: 45
```

CA Bundle Manifest

CA (Certification Authority) Bundle Manifest is a collection of trusted security certificates used to verify the authenticity of websites or services. It helps ensure secure and encrypted connections by confirming the identity of the remote server, and protecting against unauthorized access and data interception.

you can access the **CA Bundle Manifest** by clicking on the bottom corner of the web page as displayed in the screenshot below:

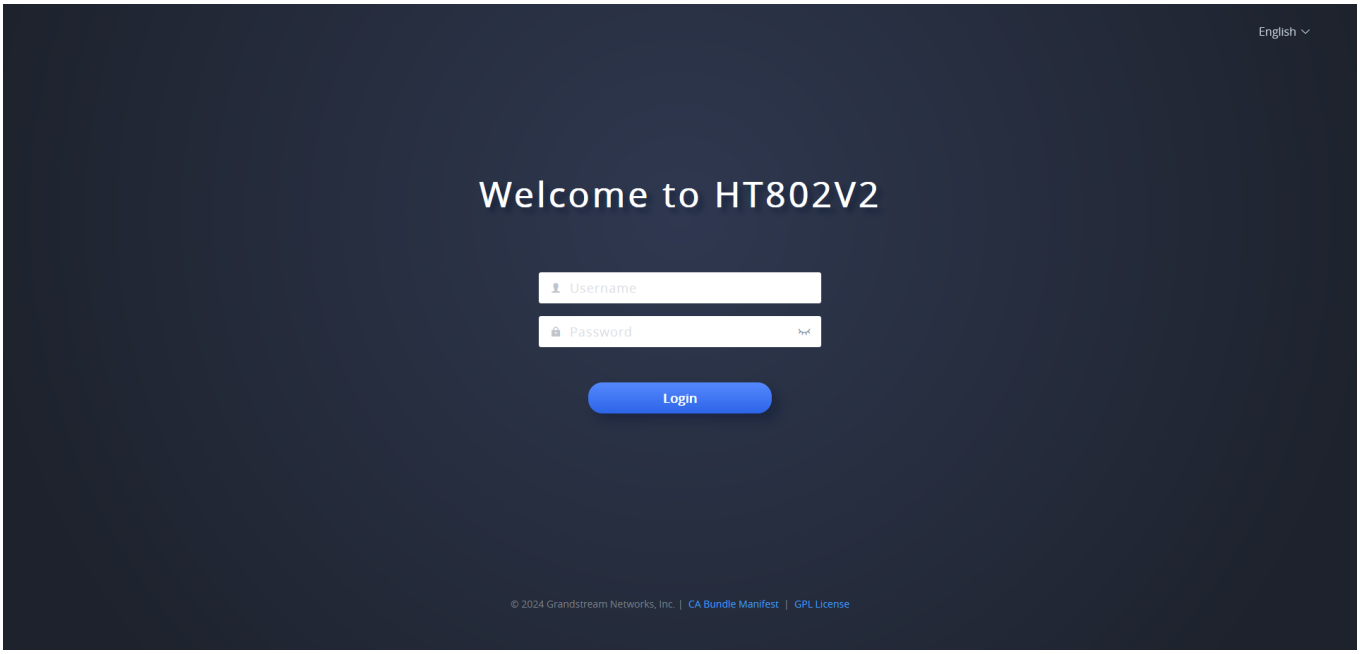

This will redirect you to a web page displaying a list of certification names and details, with their corresponding expiration dates:

	Certificate Name	Expiration
1	GlobalSign Root CA	Jan 28 12:00:00 2028 GMT
2	Entrust.net Certification Authority (2048)	Jul 24 14:15:12 2029 GMT
3	Baltimore CyberTrust Root	May 12 23:59:00 2025 GMT
4	Entrust Root Certification Authority	Nov 27 20:53:42 2026 GMT
5	AAA Certificate Services	Dec 31 23:59:59 2028 GMT
6	QuoVadis Root CA 2	Nov 24 18:23:33 2031 GMT
7	QuoVadis Root CA 3	Nov 24 19:06:44 2031 GMT
8	Security Communication RootCA1	Sep 30 04:20:49 2023 GMT
9	XRamp Global Certification Authority	Jan 1 05:37:19 2035 GMT
10	Go Daddy Class 2 Certification Authority	Jun 29 17:06:20 2034 GMT
11	Starfield Class 2 Certification Authority	Jun 29 17:39:16 2034 GMT
12	DigiCert Assured ID Root CA	Nov 10 00:00:00 2031 GMT
13	DigiCert Global Root CA	Nov 10 00:00:00 2031 GMT
14	DigiCert High Assurance EV Root CA	Nov 10 00:00:00 2031 GMT
15	SwissSign Gold CA - G2	Oct 25 08:30:35 2036 GMT
16	SwissSign Silver CA - G2	Oct 25 08:32:46 2036 GMT
17	SecureTrust CA	Dec 31 19:40:55 2029 GMT
18	Secure Global CA	Dec 31 19:52:06 2029 GMT
19	COMODO Certification Authority	Dec 31 23:59:59 2029 GMT
20	Network Solutions Certificate Authority	Dec 31 23:59:59 2029 GMT
21	COMODO ECC Certification Authority	Jan 18 23:59:59 2038 GMT
22	Certigna	Jun 29 15:13:05 2027 GMT

RESTORE FACTORY DEFAULT SETTINGS

Restoring the factory default settings will delete all configuration information stored on the phone, including but not limited to Profile and Port Settings, System Settings, Network Settings, and CDR logs. Please back up or print all settings before restoring the phone to its factory default settings. Grandstream is not responsible for restoring lost parameters or reconnecting the device to your VoIP service provider.

There are three (3) methods for resetting your unit:

Using the Reset Button

To reset default factory settings using the reset button please follow the steps above:

1. Unplug the Ethernet cable.
2. Locate the reset hole on the back panel of your HT80x V2.
3. Insert a pin in this hole and press for about 7 seconds.
4. Take out the pin. All unit settings are restored to factory settings

Using the IVR Command

Reset default factory settings using the IVR prompt:

1. Dial "***" for voice prompt.

2. Enter "99" and wait for "reset" voice prompt.

3. Enter the encoded MAC address (Look below on how to encode MAC address).

4. Wait 15 seconds and device will automatically reboot and restore factory settings.

Encode the MAC Address

1. Locate the MAC address of the device. It is the 12-digit HEX number on the bottom of the unit.

2. Key in the MAC address. Use the following mapping:

Key	Mapping
0-9	0-9
A	22 (press the "2" key twice, "A" will show on the LCD)
B	222
C	2222
D	33 (press the "3" key twice, "D" will show on the LCD)
E	333
F	3333

MAC Address Key Mapping

For example: if the MAC address is 000b8200e395, it should be keyed in as "0002228200333395"

Reset from Web Interface (Reset Type)

1. Access your HT80x V2 UI by entering its IP address in your favorite browser.
2. Enter your admin password (default: found on the sticker on the back of the unit).
3. Press **Login** to access your settings.
4. Go to **Maintenance → Restore Factory → Reset Type**.
5. Press **Reset** button (after selecting the reset type).

* **Full Reset:** This will make a full reset

* **ISP Data:** This will reset only the basic settings, like IP mode, PPPoE and Web port

* **VOIP Data Reset:** This will reset only the data related with a service provider like SIP server, sip user ID,

provisioning and others.

- Factory Reset from the phone will be disabled if the "Lock keypad update" is set to "Yes".
- If the HT80x V2 were previously locked by your local service provider, pressing the RESET button will only restart the unit. The device will not return to factory default settings.

Reset using SIP NOTIFY

1. Access your HT80x V2 UI by entering its IP address in your favorite browser.
2. Go to **Port Settings → Profile #** page.
3. Set "Allow SIP Factory Reset" to "Yes". (Default is No)
4. Once a SIP NOTIFY with "event: reset" is received, the ATAwill perform factory reset.

Received SIP NOTIFY will be first challenged for authentication purpose before taking factory reset action. The authentication can be done either using admin credentials (if no SIP account is configured) or using SIP account credentials.

CHANGE LOG

This section documents significant changes from previous versions of the admin guide for HT80x V2. Only major new features or major document updates are listed here. Minor updates for corrections or editing are not documented here.

Firmware Version 1.0.15.3

- No major changes.

Firmware Version 1.0.15.1

- No major changes.

Firmware Version 1.0.13.5

- Added support for the option "Yes with Attended Transfer Upon Onhook" in Flash Digit Control. [Flash Digit Attended Transfer]

Firmware Version 1.0.11.4

- No major changes.

Firmware Version 1.0.9.4

- No major changes.

Firmware Version 1.0.9.3

- No major changes.

Firmware Version 1.0.7.5

- No major changes.

Firmware Version 1.0.5.10

- No major changes.

Firmware Version 1.0.5.9

- No major changes.

Firmware Version 1.0.5.7

- No major changes.

Firmware Version 1.0.5.5

- No major changes.

Firmware Version 1.0.5.4

- No major changes.

Firmware Version 1.0.5.3

- No major changes.

Firmware Version 1.0.3.10

- No major changes.

Firmware Version 1.0.3.8

- No major changes.

Firmware Version 1.0.3.5

- Added support for firmware upgrade via resync SIP Notify. [Configuration and Firmware Upgrade through Resync SIP NOTIFY]

Firmware Version 1.0.1.16

- This is the initial Firmware.